womix
Comfort Controls

Hydraulic separator

CPN

red line

Mounting and operating instructions

WOMIX
Sportowa 31
89-200 Szubin
tel./fax +48 52 382 44 50 fax +48 52 382 44 51
www.womix.com.pl e-mail: export@womix.com.pl

womix
Comfort Controls

Hydraulic separator XPN

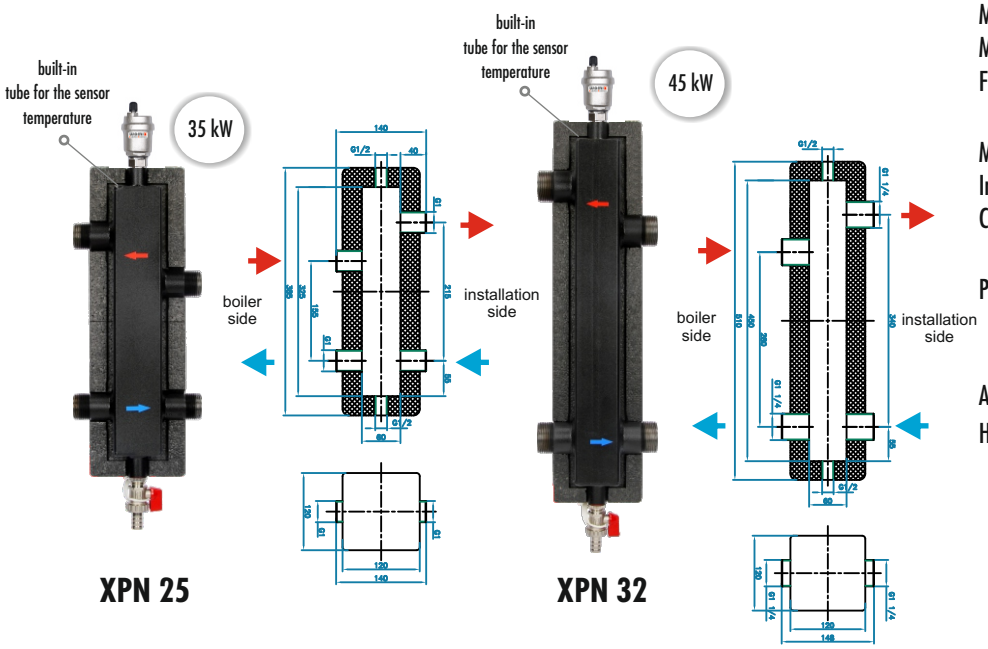

Technical data:

Material:	steel
Max pressure:	6 bar
Flow rate:	1,8 m^3/h for XPN 60 - DN 25
	2,3 m^3/h for XPN 60 - DN 32
Max tempereture:	110°C
Insulation:	EPP black
Connection:	1"M for XPN 60 - DN 25
	GZ 1 1/4" for XPN 60 - DN 32
Power:	35 kW at ΔT 20°C for XPN 60 - DN25
	45 kW at ΔT 20°C for XPN 60 - DN32

Atention!!
Hydraulic separator are intended for vertical mounting only.

Equipment

Insulation EPP | Air vent | Drain valve

Hydraulic separator XP

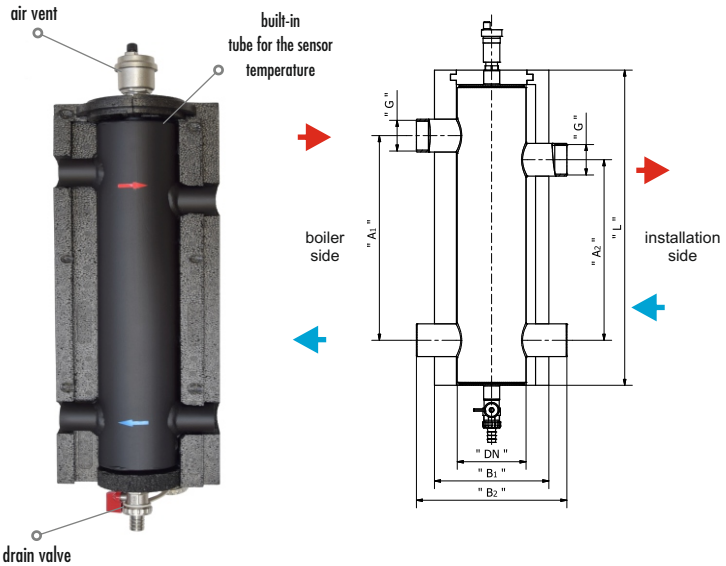

Technical data:

Material:	steel
Max pressure:	6 bar
Flow rate:	2,3 m^3/h for XP 65 - DN 25
	4,2 m^3/h for XP 80 - DN 32
	5,7 m^3/h for XP 100 - DN 40
	9,0 m^3/h for XP 150 - DN 50
Max temperature:	110°C
Insulation:	EPP black
Connection:	1" F for XP 65 - DN 25
	1 1/4" F for XP 80 - DN 32
	1 1/2" F for XP 100 - DN 40
	2" for XP 150 - DN 50
Power:	50 kW at ΔT 20°C for XP 65 - DN 25
	80 kW at ΔT 20°C for XP 80 - DN 32
	120 kW at ΔT 20°C for XP 100 - DN 40
	180 kW at ΔT 20°C for XP 150 - DN 50

	XP 65 - DN 25	XP 80 - DN 32	XP 100 - DN 40	XP 150 - DN 50
A_1 (mm)	300	300	300	350
A_2 (mm)	340	340	340	440
B_1 (mm)	155	155	190	250
B_2 (mm)	200	200	250	300
L (mm)	520	520	520	680
DN	65	80	100	150
G	1" F	1 1/4" F	1 1/2" F	2" F

Attention!!
Hydraulic separator are intended for vertical mounting only.

Equipment:

Insulation EPP | Air vent | Drain valve

Hydraulic separator CPN 60 - DN 20 (3/4")

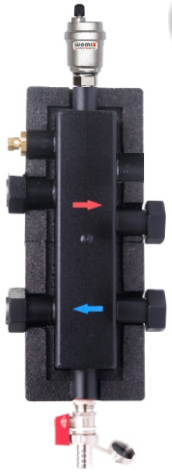

35 kW

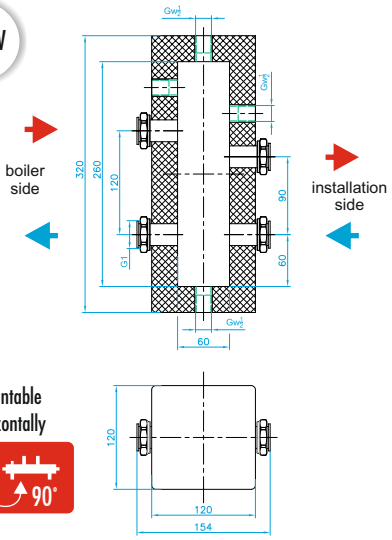

Mountable horizontally

Technical data:

Material:	steel
Max pressure:	6 bar
Flow rate:	1,7 m^3/h
Max temperature:	110°C
Insulation:	EPP black
Connection:	boiler side: 1" F nut
	installation: 1" F nut
Power:	35 kW at ΔT 20°C

Equipment:

Insulation EPP | Air vent | Drain valve | Immersion sleeve | Nipples 1"x1"

Hydraulic separator CPN MINI - DN 25 (1")

40 kW

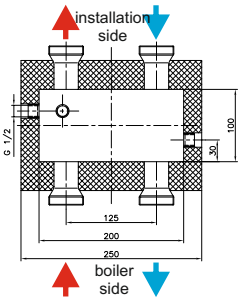

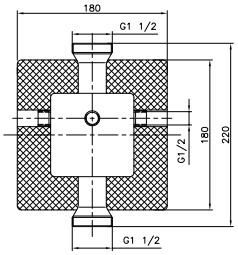

Technical data:

Material:	steel
Max pressure:	6 bar
Flow rate:	2,5 m^3/h
Max temperature:	110°C
Insulation:	EPP black
Connection:	1 1/2" M
Power:	40 kW at ΔT 20°C

Equipment:

Insulation EPP | Plug 1/2" | Immersion sleeve

Hydraulic separator CPN 70 - DN 25 (1")

55 kW

Boiler side

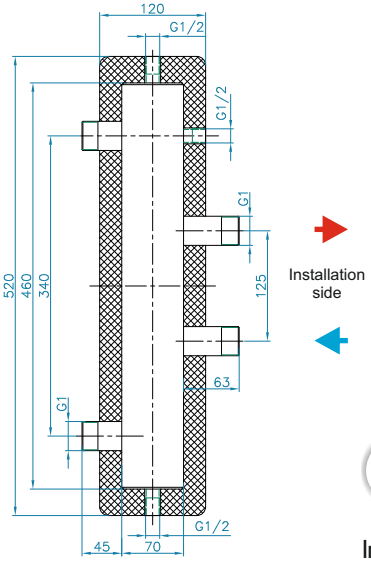

Installation side

Mountable horizontally

Technical data:

Material:	steel
Max pressure:	6 bar
Flow rate:	2,5 m^3/h
Max temperature:	110°C
Insulation:	EPP black
Connection:	1"
Power:	55 kW at ΔT 20°C

Equipment

Insulation EPP | Air vent | Drain valve | Immersion sleeve | Fitting DN 25 | Wall brackets

Hydraulic separator CPN 100 - DN 32 (1 1/4”)

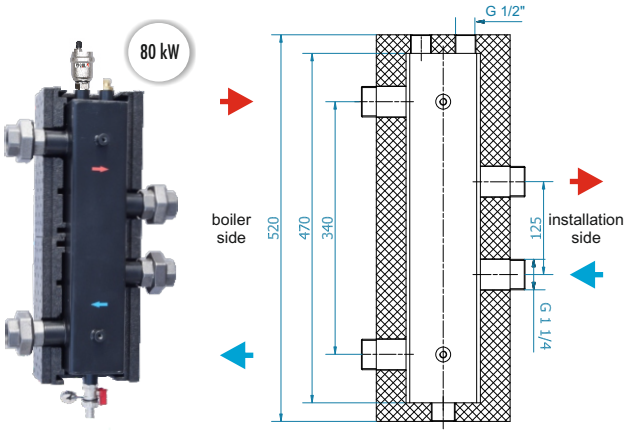

Technical data:

Material:	steel
Max pressure:	6 bar
Flow rate:	4,5 m^3/h
Max temperature:	110°C
Insulation:	EPP black
Connection:	1 1/4"
Power:	80 kW at ΔT 20°C

Equipment

Insulation EPP | Air vent | Drain vavle | Immersion sleeve | Fitting DN 32 | Wall brackets

Hydraulic separator CPN 100 - DN 40 (1 1/2”)

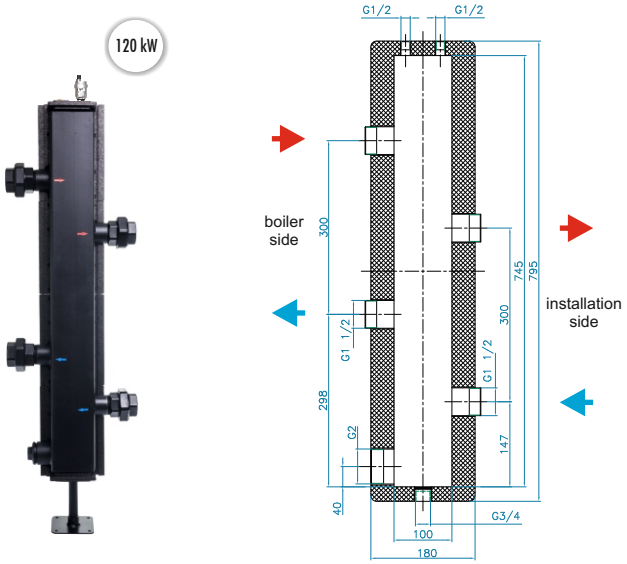

Technical data:

Material:	steel
Max pressure:	6 bar
Flow rate:	6,5 m^3/h
Max temperature:	110°C
Insulation:	EPP black
Connection:	1 1/2"
Power:	120 kW at ΔT 20°C

Equipment

Insulation EPP | Air vent | Plug 2" | Immersion sleeve | Fitting DN 40 | Mounting feet

Hydraulic separator CPN 120

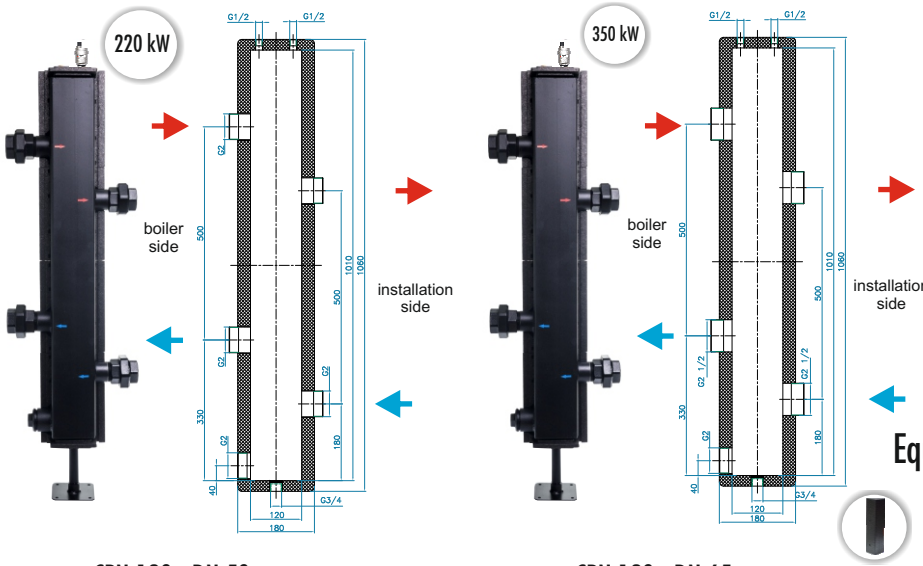

CPN 120 - DN 50

CPN 120 - DN 65

Technical data:

Material:	steel
Max pressure:	6 bar
Flow rate:	9,5 m^3/h or 18 m^3/h
Max temperature:	110°C
Insulation:	EPP black
Connection:	2" or 2 1/2"
Power:	220 kW or 350 kW (depending on the model)

Equipment:

Insulation EPP | Air vent | Plug 2" | Immersion sleeve | Fitting DN 40 | Mounting feet

Hydraulic separator CPN 70 2F - DN 25 (1")

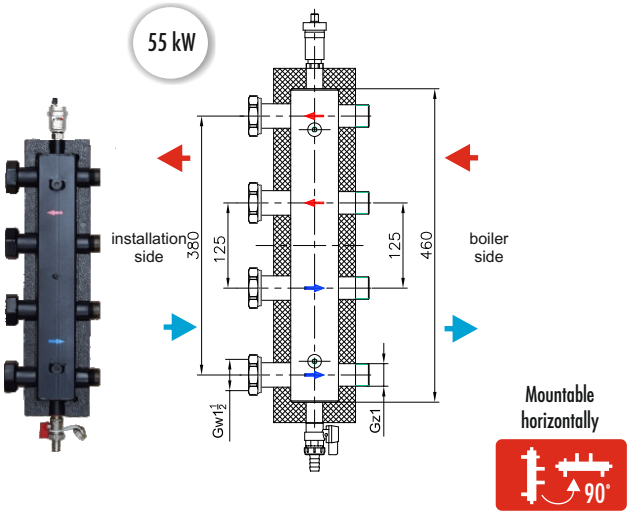

Technical data:

Material:	steel
Max pressure:	6 bar
Flow rate:	2,5 m³/h
Max temperature:	110°C
Insulaton:	EPP black
Connection:	1"
Power:	55 kW at ΔT 20°C

Equipment:

Insulation EPP | Air vent | Drain valve | Fitting DN 32 | Wall brackets

Hydraulic separator CPN 100 2F - DN 32 (1 1/4")

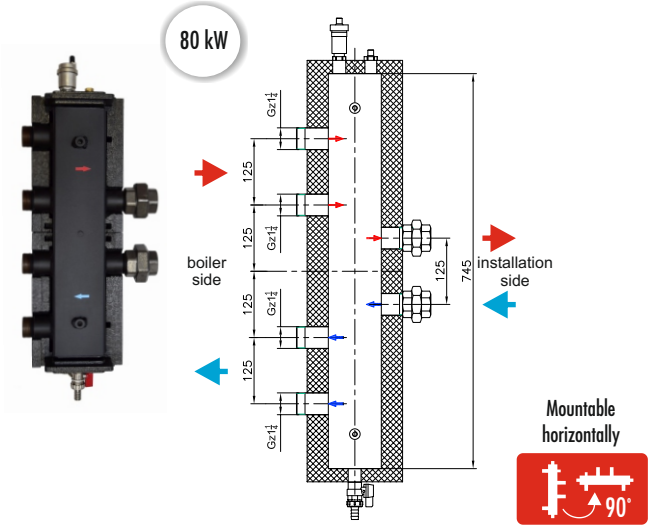

Technical data:

Material:	steel
Max pressure:	6 bar
Flow rate:	4,5 m³/h
Max temperature:	110°C
Insulation:	EPP black
Connection:	1 1/4"
Power:	80 kW at ΔT 20°C

Equipment:

Insulation EPP | Air vent | Drain valve | Immersion sleeve | Fitting DN 32 | Wall brackets

Hydraulic separator CPN 100 2F - DN 40 (1 1/2")

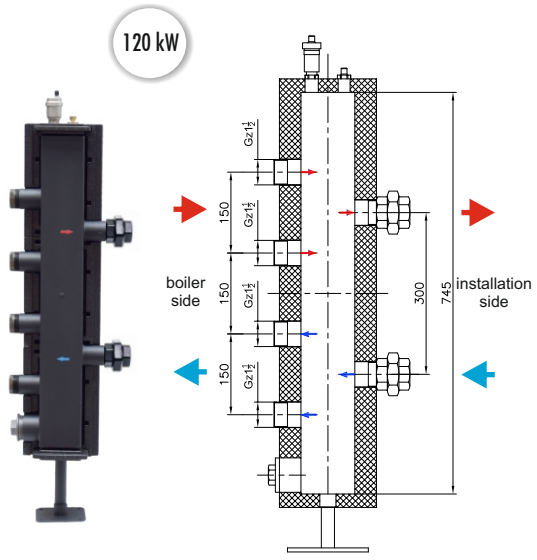

Technical data:

Material:	steel
Max pressure:	6 bar
Flow rate:	6,5 m³/h
Max temperature:	110°C
Insulation:	EPP black
Connection:	1 1/2"
Power:	120 kW at ΔT 20°C

Equipment:

Insulation EPP | Air vent | Plug 2" | Immersion sleeve | Fitting DN 40 | Mounting feet

Hydraulic separator CPN 250, CPN 300

Mounting feet complete

Technical data:

Material:	steel
Max pressure:	6 bar
Max temperature:	110°C
Flow rate:	9-30 m^3/h (depending on the model)
Insulation:	EPP czarna
Connection:	(depending on the model, see table)
Power:	120-700 kW (dependig on the model)
Flange pressure standard:	PN 16

1. System of built-in grids.

2. Partitions.

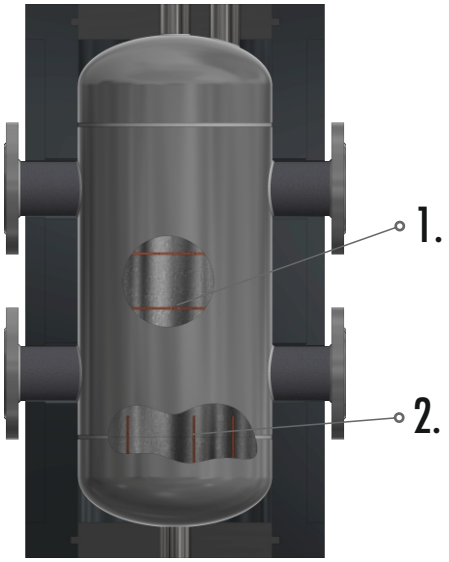

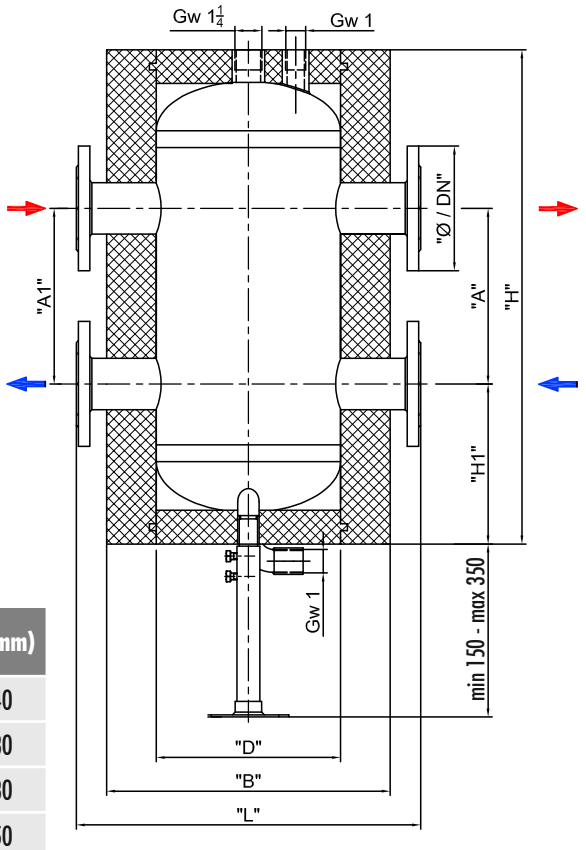

	A (mm)	A_1 (mm)	D (mm)	B (mm)	L (mm)	DN	H (mm)	H_1 (mm)
CPN 150 - DN 50	260	260	Ø 168	Ø 250	350	50	530	140
CPN 250 - DN 65	260	260	Ø 273	Ø 420	510	65	750	230
CPN 250 - DN 80	260	260	Ø 273	Ø 420	510	80	750	230
CPN 300 - DN 100	340	260	Ø 324	Ø 420	510	100	900	250
CPN 300 - DN 125	340	260	Ø 324	Ø 420	510	125	900	250

Type	Power at ΔT 20°C	Flow [m^3/h]	Volume [l]	Catalog number
Hydraulic separator **CPN 150 - DN 50** with insulation	**120,00**	6,00	9	609100
Hydraulic separator **CPN 250 - DN 65** with insulation	**210,00**	9,00	26	609101
Hydraulic separator **CPN 250 - DN 80** with insulation	**280,00**	12,00	26	609102
Hydraulic separator **CPN 300 - DN 100** with insulation	**470,00**	20,00	61	609103
Hydraulic separator **CPN 300 - DN 125** with insulation	**700,00**	30,00	62	609104